BAUER BG 33

Drilling Rig

Base Carrier BT 85

BAUER

The Bauer Drilling Rigs

The Bauer drilling rigs are multi-function equipment for a variety of foundation construction systems. The selection between two model ranges allows an optimum choice for differing project or transportation requirements.

Specific highlights of the Bauer drilling rigs are:
- High safety standards
- Environmental sustainability, economic efficiency and performance
- Easy to transport and short rigging time
- High quality standard
- Long lifetime and excellent resale value

Kelly Drilling

Cased Kelly Drilling
Installation with BTM

CFA
Continuous Flight
Auger Drilling

FDP
Full Displacement Piling
(Standard or Lost Bit)

FoW
Front of Wall

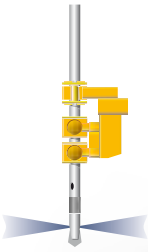

HDI
Jet Grouting

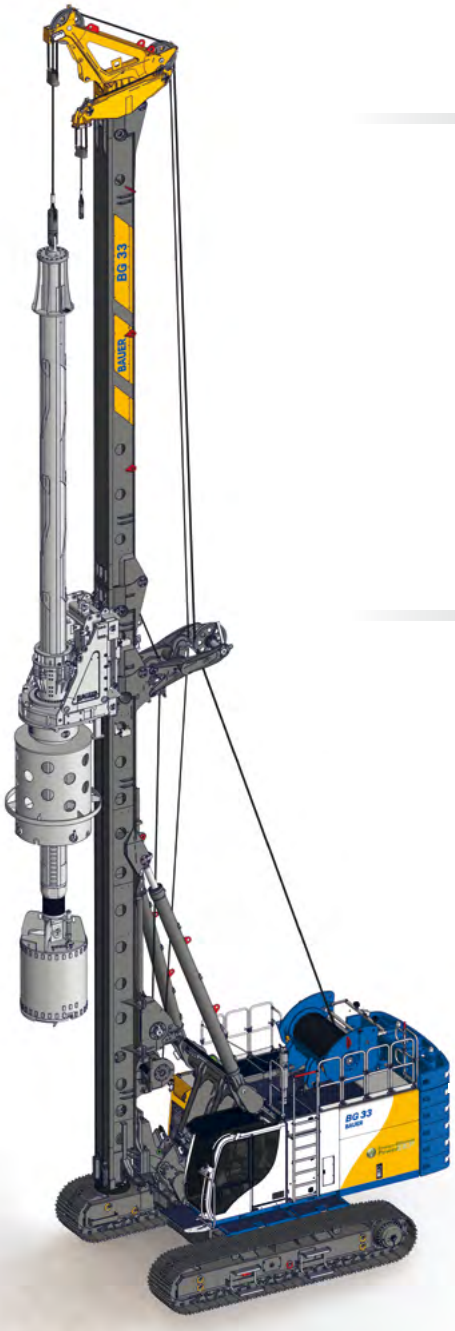

The Drilling Rig
BG 33 (BT 85)

Max. drilling diameter:	**2,500 mm**
Max. drilling depth:	**72.4 m**
Max. torque:	**342 kNm**
Max. height:	**30.3 m**
Engine:	**Volvo TAD 13 345 / 405 kW**

Cased Kelly Drilling
Installation with Oscillator

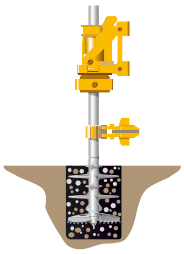

SCM / SCM-DH
Single Column Mixing

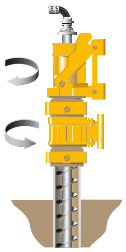

CCFA
Cased CFA System
with KDK + BTM / Double
Rotary System

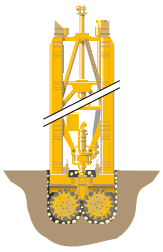

BC
Trench Cutter

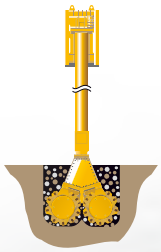

CSM
Cutter Soil Mixing

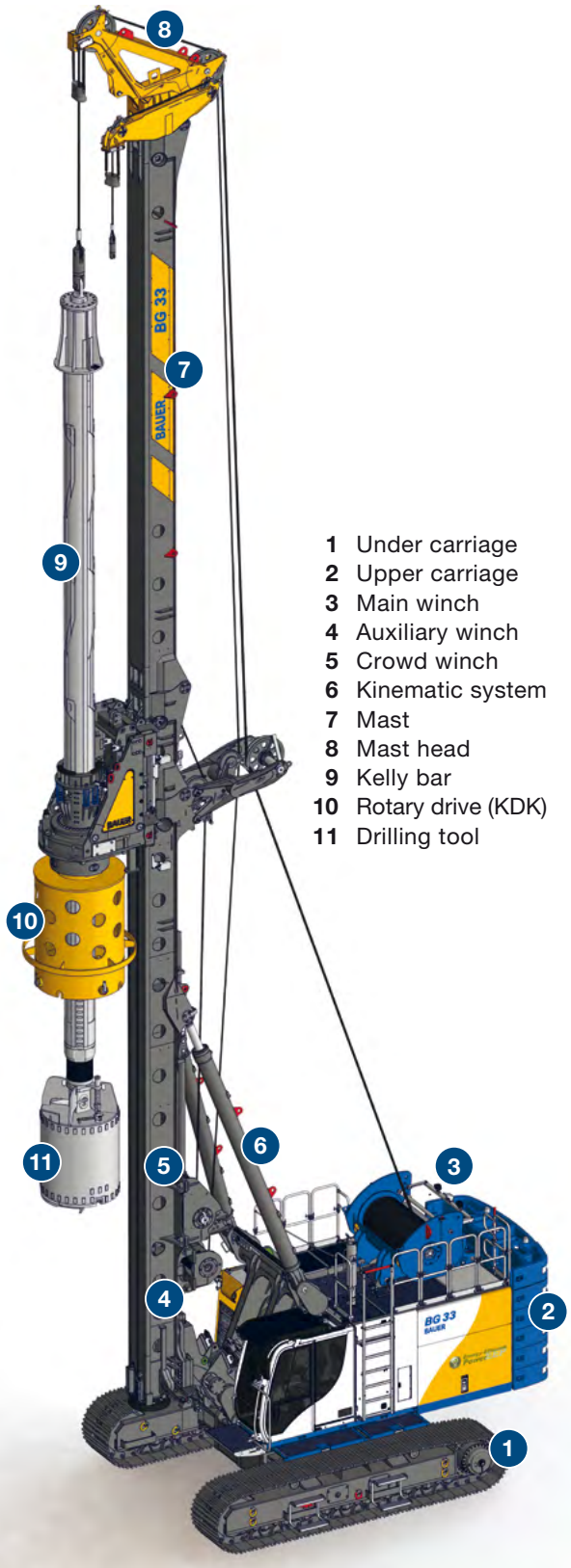

1 Under carriage
2 Upper carriage
3 Main winch
4 Auxiliary winch
5 Crowd winch
6 Kinematic system
7 Mast
8 Mast head
9 Kelly bar
10 Rotary drive (KDK)
11 Drilling tool

Spotlights

Modern, ergonomic operator's cab
- FOPS compliant with additional protective roof guard
- Premium operator seat, air-sprung and heatable
- Joystick controls with high functionality
- B-Drive for multi-functional potentiometer input

Powerful Volvo engine
- Volvo TAD 13 (UN ECE R96* or Stage V / Tier 4 final)
- Low noise emission
- Worldwide Volvo service partners

Safety equipment
- Integrated service platforms in the upper carriage for easy and safe maintenance work
- Retractable grating on the side of the cab
- Guardrails on the upper level (foldable for transport)
- Rear view cameras

Energy-Efficient PowerEEP

- **Reduction of fuel consumption by up to 30%**
- **Increased productivity through improved efficiency**
- **Significantly reduced noise levels**
- **Tried and proven suitability for practical application**
- **Optimized parallel operation of main and auxiliary consumers**

* Exhaust emission equivalent Tier 3 / Stage III A

BG 33 | © BAUER Maschinen GmbH 05/2026

Safe and easy transport
- Mobilization kit with hydraulically operated pin connection for fast and save demounting of lower mast section
- Hydraulic locking of support trestle
- Activated by remote control multi

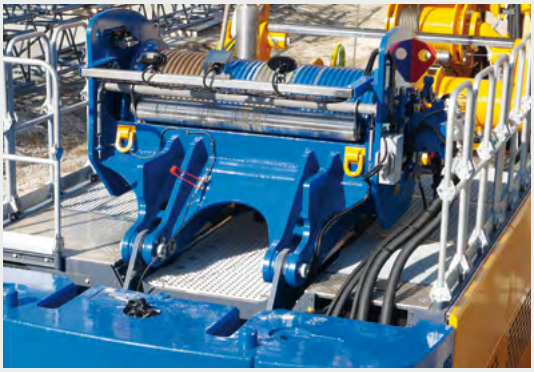

Main winch on upper carriage
- Single layer winch for minimized rope wear
- Constant line pull
- Designed for heavy continuous operation (M6 / L3 / T5)
- Service-friendly winch position
- Swing down mechanism for transport

Flexible mast concept
- Vario-masthead
  - Mast head for drill axis distance 1,100 expandable to 1,400 mm
  - Increased stroke for Kelly bars when using an upper Kelly guide
  - Tiltable main jib for single-pass processes and for optimized transport
- Vario-crowd system
  - Transport possible with built-in crowd ropes (Kelly drilling)
  - Reduced headroom version possible by means of integrated Vario-mast section
- Vario-mast section 2 m
- Vario-mast section 2 m + mast extension 2 m (only Single-Pass)

Remote control for rigging the machine
- The remote control can be used to perform numerous rigging functions outside the danger zone, such as moving the drilling rig, telescoping the under carriage, etc.
  - Operation within sight of the controlled rigging functions
  - Rugged and compact wireless remote control Multi with LCD screen
  - Lockable storage box for the remote control can be accessed from ground level

Rotary Drive

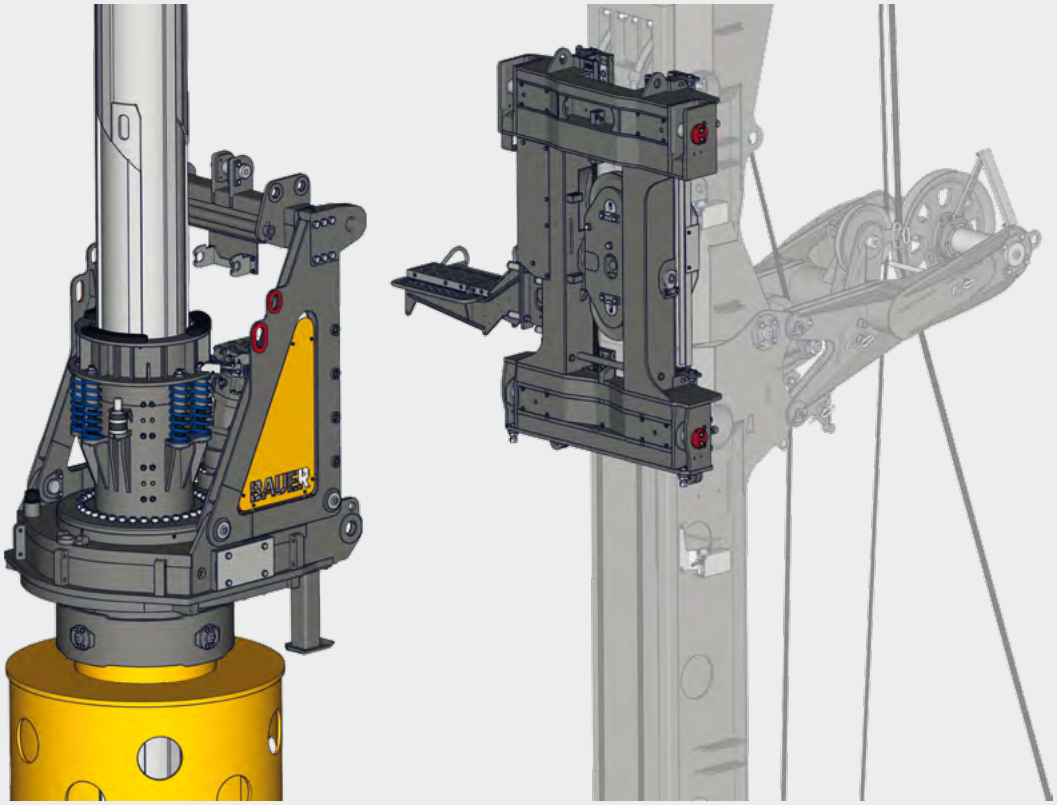

Kelly set-up
- Long Kelly guide
- Integrated shock absorbing spring-system
- Kelly visualization (see page 11)
- Enhanced drilling performance
- High operation comfort
- Reduction of wear on Kelly bars and drive keys

Rotary drive
- Optional single gear drive or multi gear drive
- Max. torque casing 342 kNm
- Max. speed of rotation 53 rpm
- Various modes of operation, partially selectable speed of rotation and torque

Hydraulically operated pin connection on the crowd sledge
- Pin connection controlled via remote control
- Simple and secure attachment of rotary drive, no working at heights unsecured

KDK 300 S*

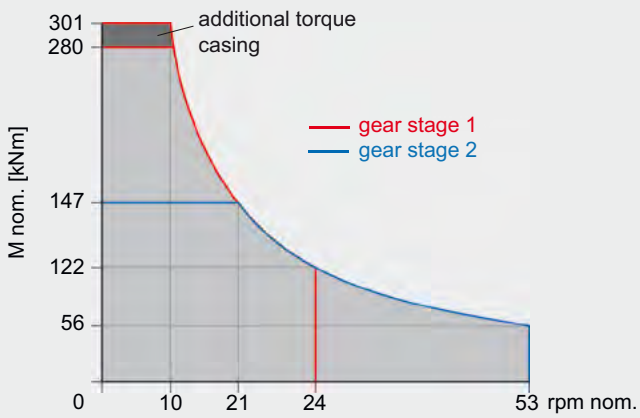

KDK 340 K*

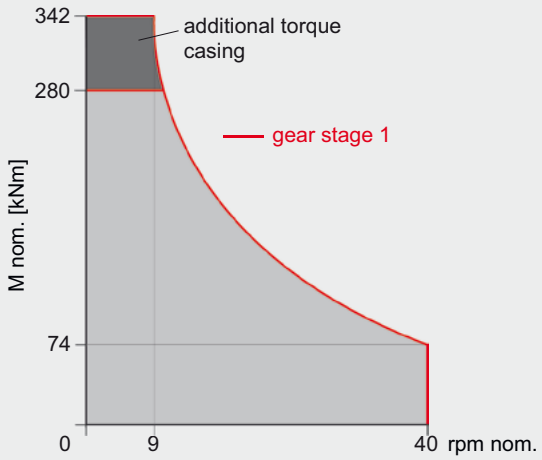

* with 405 kW

Technical Equipment (selection)

Base carrier BT 85

Standard
- Removable counterweight elements
- Retractable grating on side of cab
- Electric refueling pump
- Energy-Efficient Power (EEP)
- Premium operator seat
- Cameras for rear area and main winch surveillance
- Integrated service platforms
- Central lubrication system
- Guard rails on the upper level (foldable for transport)

Optional
- Counterweight, variably adjustable
- Rear support unit
- High-pressure cleaner with water tank
- Compressor 1,000 l/min
- Electric generator
- Arctic kit / Arctic kit plus
- Cab space heater incl. time switch
- Front screen guard
- Weather protection
- Premium operator seat with air-condition

Drilling rig attachment

Standard
- Sturdy V-type mast kinematic system
- Main winch with hydraulic free-fall control
- Hydraulic locking for support trestle
- Swivel for main rope
- Vario-mast head
- Pivoted anchor point for auxiliary rope

Optional
- Extension of drill axis to 1,400 mm
- Mast support unit
- Vario-crowd system with Vario-mast section 2 m
  - Transport possible with built-in crowd ropes (Kelly operation)
  - Reduced headroom version, possible with integrated Vario-mast section 2 m
- Mast extension 2 m (only Single-Pass)
- Attachment of casing oscillator up to BV 1500 with UW 80 or up to BV 2000 with UW 100
- Concrete- / Air- / Suspension line attachment
- Mobilization kit

Rotary drive

Standard
- Rotary drive KDK 300 K (single-gear drive)
- Kelly drive adapter for outer Kelly tube 419 mm
- Quick-release hydraulic couplers

Optional
- Rotary drive KDK 300 S (multi-gear drive)
- Rotary drive KDK 340 K (single-gear drive)
- Kelly drive adapter for outer Kelly tube 394 / 470 mm
- Torque multiplier BTM 720 K Kelly drilling
  - Torque 420 kNm (nominal)
- Torque multiplier BTM 400 for CCFA

Measuring and control system

Standard
- PLC processor for all electrically actuated functions
- Automatic mast alignment with memory function
- Crowd stroke monitoring
- Electronic mast reach limiter
- Kelly visualization

Optional
- Electronic load sensing for auxiliary winch
- Recording of concrete pressure and volume for Single-Pass processes
- Software modules for further applications
- Adaptive Kelly speed assistant
- Automatic drilling and extraction control for Single-Pass processes
- BAUER Enhanced CAN Interface (BECI)
- Crowd Plus
- Slewing Angle Limiter

B-TRONiC 5

Designed for you and ready for action.

Dynamic

- Information that adapts to the respective process step
- Dynamic, situation adjusted screen layout
- Visualized position changes of drilling equipment for a clear process understanding

Intuitive

- Intuitive menu navigation
- Help options on every page
- Focus on process-related information

BG 33 | © BAUER Maschinen GmbH 05/2026

Click now and learn **more about the powerful B-Tronic 5.**

Personalized

- User-specific login available
- Use of existing set values
- Personalization of widgets

Connected

- Interface to data recording
- Interface for service

Assistance Systems (selection)

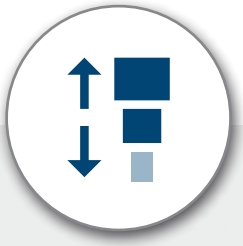

Adaptive Kelly Speed Assistant

The Adaptive Kelly speed assistant takes over the extension and retraction of the Kelly bar almost automatically. It independently reduces the speed at the segment transitions, protects the equipment from damage, minimizes wear, and lowers noise emissions.

Crowd Plus

Crowd Plus supports the pulling and lifting of casings. Using the pulling plate between the drilling tool and the Kelly bar, the pulling force of the main winch is transferred to the crowd system. Through monitored and safely synchronized operation of the main winch and the crowd winch, even large diameters and heavy drilling equipment can be moved reliably.

Automatic Drilling and Extraction Control for Single Pass Processes

The automatic system controls the drilling and extraction speed of the crowd system and enables hands-free operations. This ensures the installation of a high-quality pile while simultaneously keeping the concrete consumption at an optimum. Both automatic functions provide a stable, precise, and consistently uniform single-pass working process.

Further Assistance Systems

Kelly Visualization

Kelly visualization makes working with the Kelly bar intuitive and transparent. It displays the locking recesses, the Kelly sections, the distance to the next section, and the spring travel – all in real time. The rapid approach of the locking position results in a significantly enhanced drilling performance. In addition, the wear on the Kelly bar and the drive keys is considerably reduced.

Fill Level Assistant and Threshold Assistant

The fill level assistant monitors the fill level of the drilling tool and prevents over-drilling or overfilling. Color-coded indicators show the status; once the target value is reached, crowd and rotary drive stop automatically. The lead assistant monitors the lead between tool and casing and prevents advance drilling. When the threshold is reached, both drives stop. Both assistants can be combined.

Automatic Torque Setting

The automatic torque setting limits the maximum torque to prevent excessive loading and any resulting damage to the drilling equipment. The operating limits of the installed tooling are taken over via the machine menu, and the system ensures that operation is carried out strictly within these limits.

- Stability Plus
- Kelly Drilling Assistant
- One-directional Spoil Discharge Assistant
- Bi-directional Spoil Discharge Assistant
- Slewing Angle Warner and Limiter
- Casing Assistant
- Auto Mast Alignment with Memory Function
- Slack Rope with Automatic Swivel Alignment
- etc.

Discover more innovative assistance systems – click now!

Dimensions – Basic Version

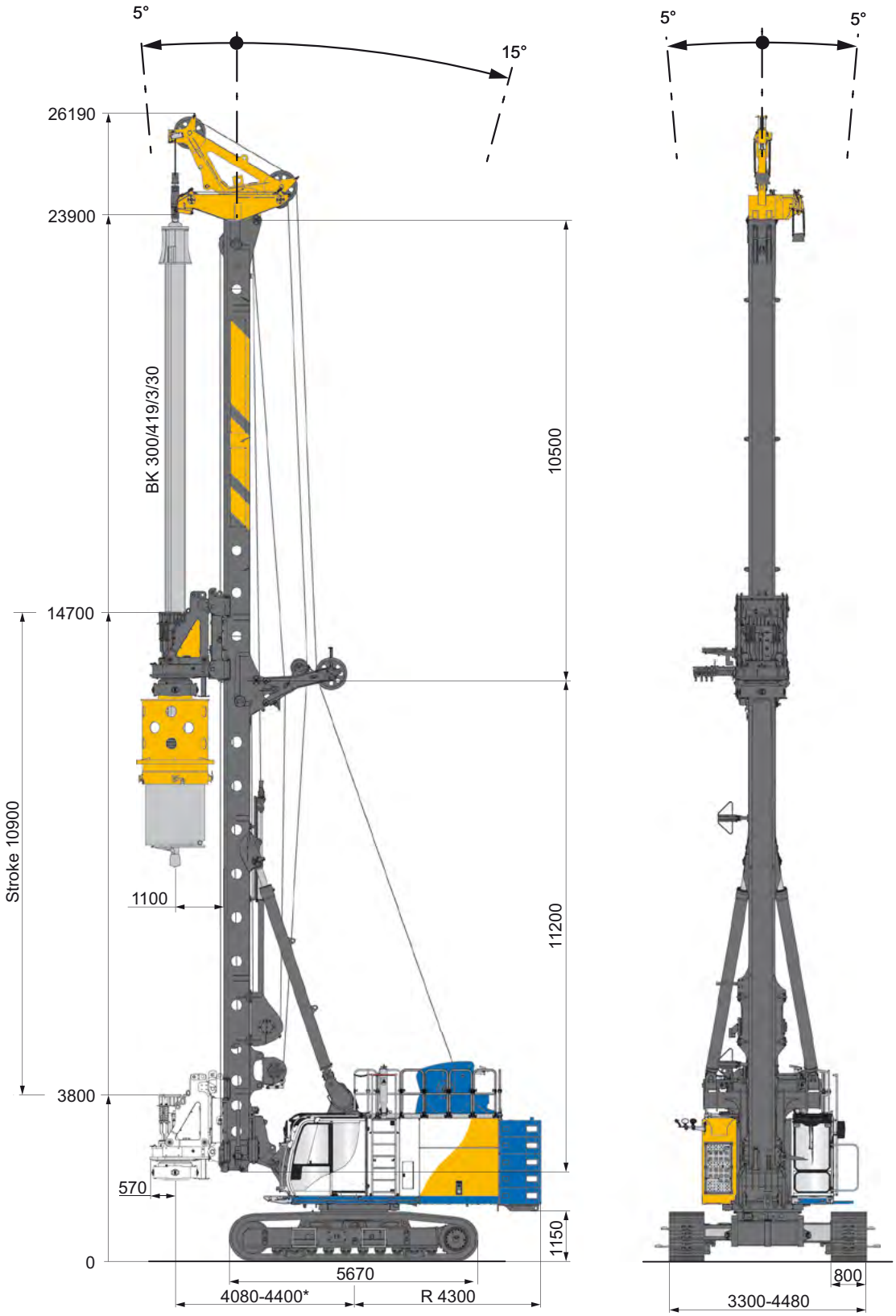

Operating weight 102.0 t
(as shown)

* depending on equipment

Technical Specifications

Rotary drive	KDK 300 S	KDK 340 K
Torque casing (nominal) at 350 bar	301 kNm	342 kNm
Torque drilling (nominal) at 350 bar	280 kNm	280 kNm
Speed of rotation (max.)	53 rpm	40 rpm
Crowd winch system		
Max. sledge stroke with 2 m Vario + 2 m mast extension	23,000 mm	
Crowed force push and pull, effective / nominal	330 / 423 kN	
Rope diameter	24 mm	
Speed (down / up)	11.0 m/min	
Fast speed (down / up)	35.0 m/min	
Main winch	single-layer	
Winch classification	M6 / L3 / T5	
Line pull (1st layer) effective / nominal	265 / 335 kN	
Rope diameter	32 mm	
Line speed (max.)	80 m/min	
Auxiliary winch (selectable)		
Line pull (1st layer) effective / nominal	80 / 100 kN	100 / 125 kN
Rope diameter	20 mm	
Line speed (max.)	55 m/min	
Base carrier (EEP)	BT 85	
Engine	Volvo TAD 13	
Rated output ISO 3046-1	345 kW @ 1,850 rpm	405 kW @ 1,850 rpm
Exhaust emission	UN/ECE R96*	EU Stage V EPA/CARB Tier 4 final
Diesel tank capacity / AdBlue Tank	730 / – l	730 / 70.0 l
Sound pressure level in the cabin (EN 16228, Annex B)	LP_A 80 dB (A)	
Sound power level (2000/14/EC u. EN 16228, Annex B)	LW_A 108 dB (A)	
Hydraulic pressure	350 bar	
Hydraulic oil tank capacity	650 l	
Flow rates	2 x 320 + 1 x 565 + 1 x 215 l/min	
Under carriage		UW 100
Crawler type	B 7	
Traction force effective / nominal		730 / 860 kN

* exhaust emission equivalent Tier 3 / Stage III A emission standard

Application – Kelly Drilling

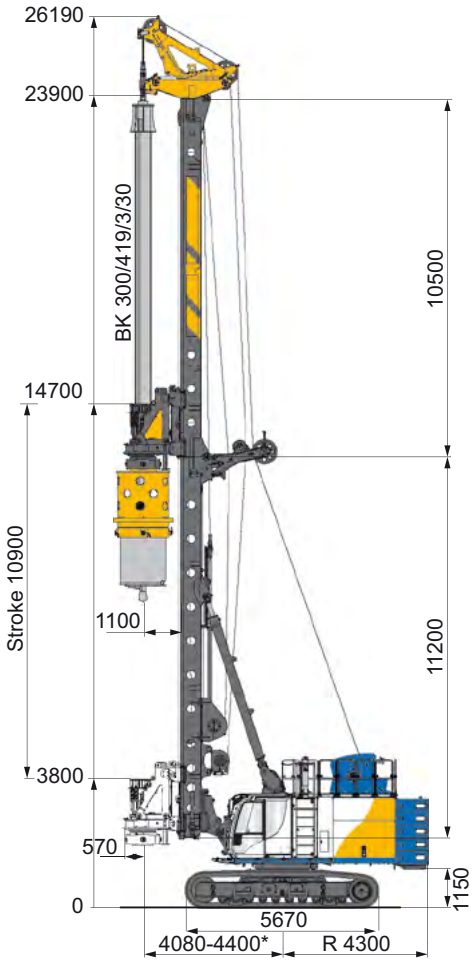

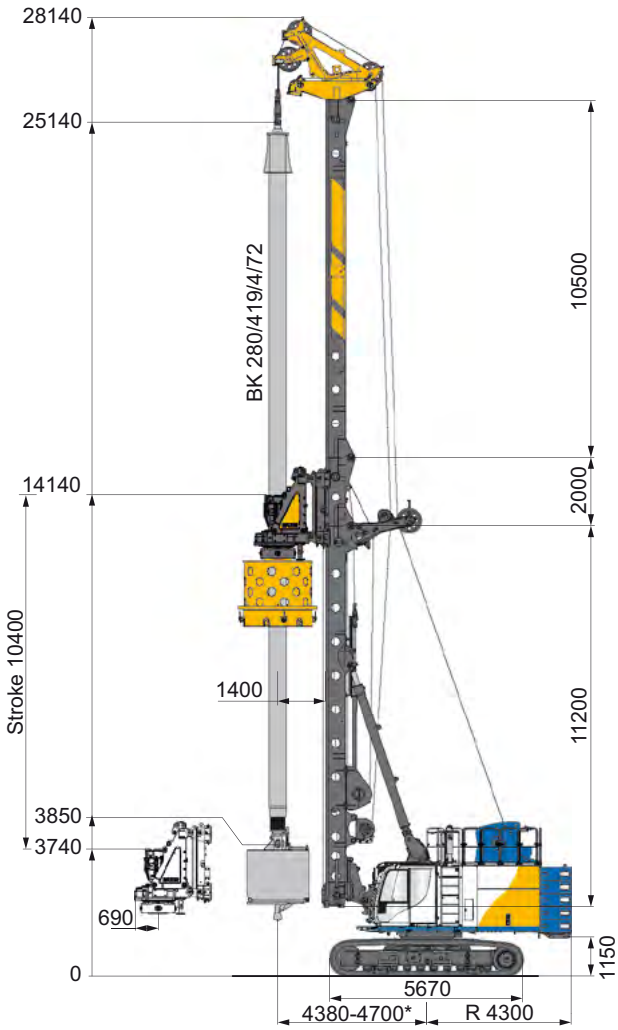

	Basic version	Upgraded version
Rotary drive	KDK 300 S	KDK 340 K
Mast extension	without	2 m Vario
Drilling axis	1,100 mm	1,400 mm
Max. drilling diameter		
uncased	1,900 mm	2,500 mm
cased	1,600 mm	2,200 mm
Operating weight approx.	102 t	132 t
with Kelly	BK300/419/3/30	BK280/419/4/72
with casing drive adapter	1,500 mm	2,000 mm
with bucket	1,350 mm	1,830 mm
with counterweight *	14.9 t	29.4 t

* depending on equipment

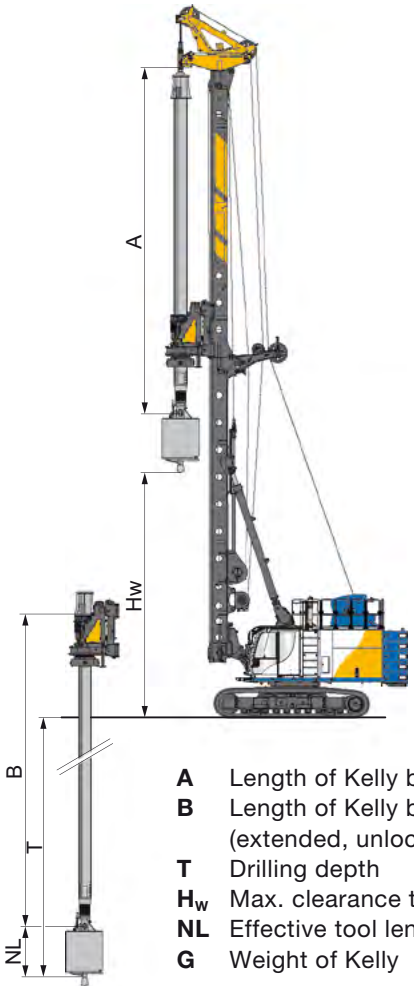

Drilling depths – uncased Kelly drilling							
				Basic version		Upgraded version	
3-part Kelly	A (m)	B (m)	G (kg)	H_W (m)	T (m)	H_W (m)	T (m)
BK300/419/3/27	11.7	29.4	5,850	9.6	27.5	9.6	27.6
BK300/419/3/30	12.7	32.4	6,300	9.0	30.5	9.6	30.6
BK300/419/3/33	13.7	35.4	6,700	8.0	33.5	9.3	33.6
BK300/419/3/36	14.7	38.4	7,100	7.0	36.5	8.3	36.6
BK300/419/3/39	15.7	41.4	7,550	6.0	39.5	7.3	39.6
BK300/419/3/42	16.7	44.4	8,150	5.0	42.5	6.3	42.6
4-part Kelly							
BK280/419/4/36	12.3	38.2	8,300	9.4	36.3	9.6	36.4
BK280/419/4/40	13.3	42.2	8,900	8.4	40.3	9.6	40.4
BK280/419/4/44	14.3	46.2	9,550	7.4	44.3	8.6	44.4
BK280/419/4/48	15.3	50.2	10,200	-	-	7.6	48.4
BK280/419/4/56	17.3	58.2	11,400	-	-	5.6	56.4
BK280/419/4/64	19.3	66.2	12,650	-	-	3.6	64.4
BK280/419/4/68	20.3	70.2	13,300	-	-	2.6	68.4
BK280/419/4/72	21.3	74.2	14,000	-	-	1.6	72.4

A Length of Kelly bar (retracted)
B Length of Kelly bar (extended, unlocked)
T Drilling depth
H_W Max. clearance to drilling tool
NL Effective tool length
G Weight of Kelly bar

Drilling data as shown are based on tool length NL = 1.9 m, minimum horizontal mast reach and using Bauer attachment. Drilling depth is increased by 0.32 m when using maximum horizontal mast reach.

Further drilling depths, diameters and other Kelly types on request.

Torque multiplier BTM 720 for a torque of 420 kNm for casing

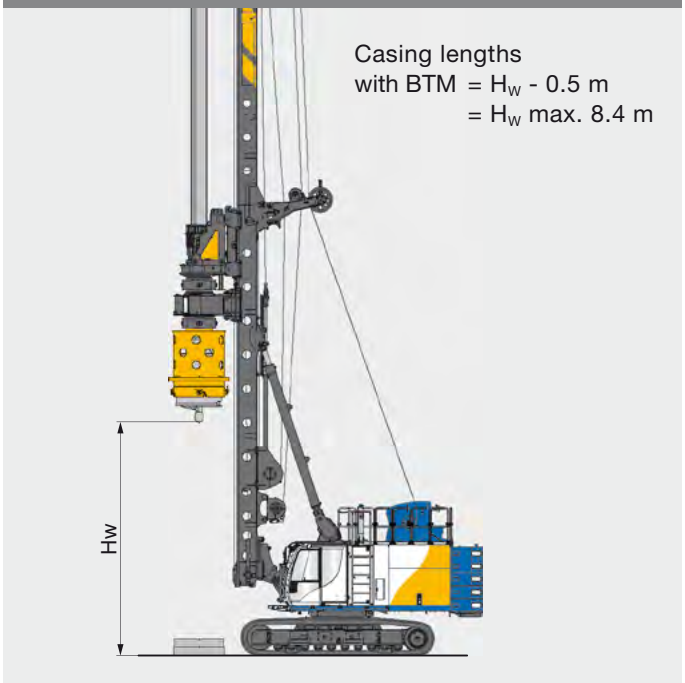

Kelly drilling with casing oscillator up to BV 1500 (UW 80) or up to BV 2000 (UW 100)

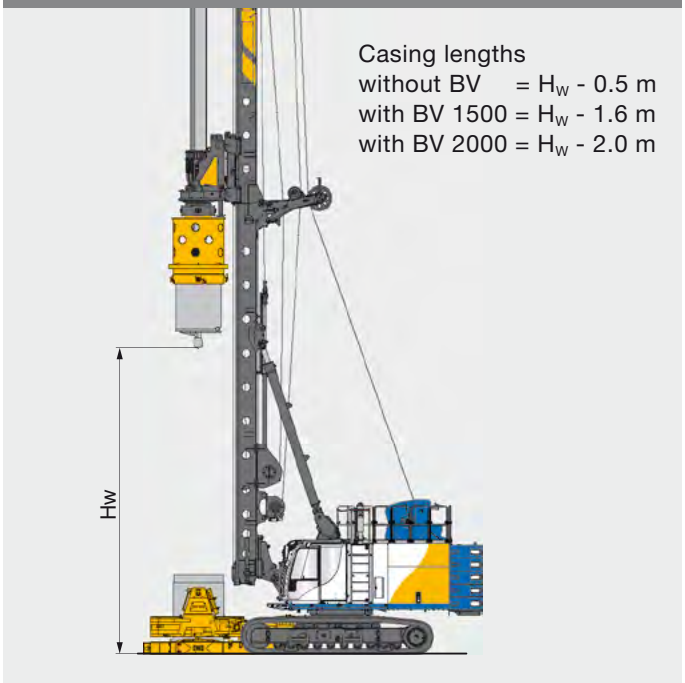

Application – CFA-Drilling

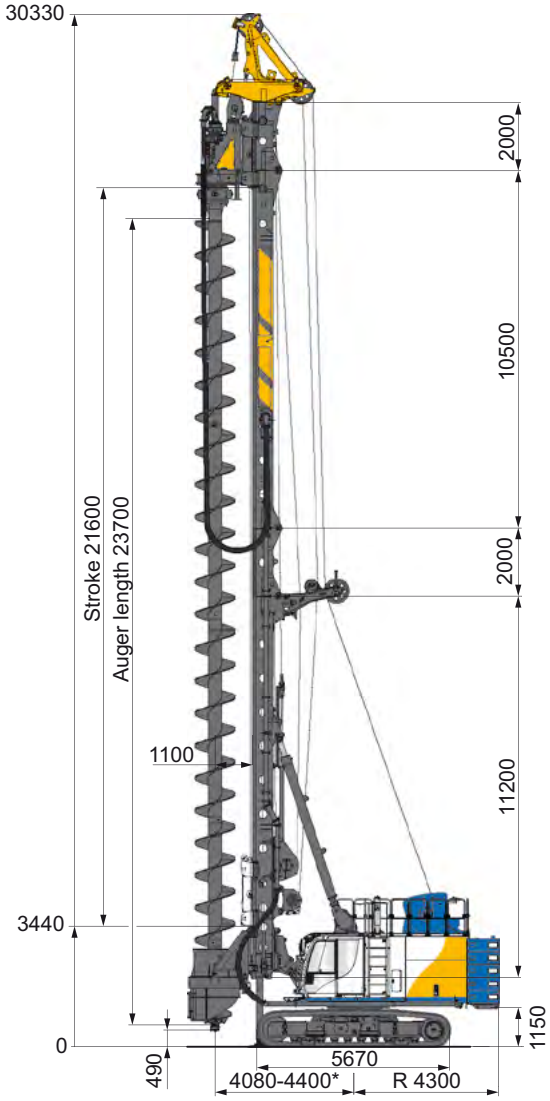

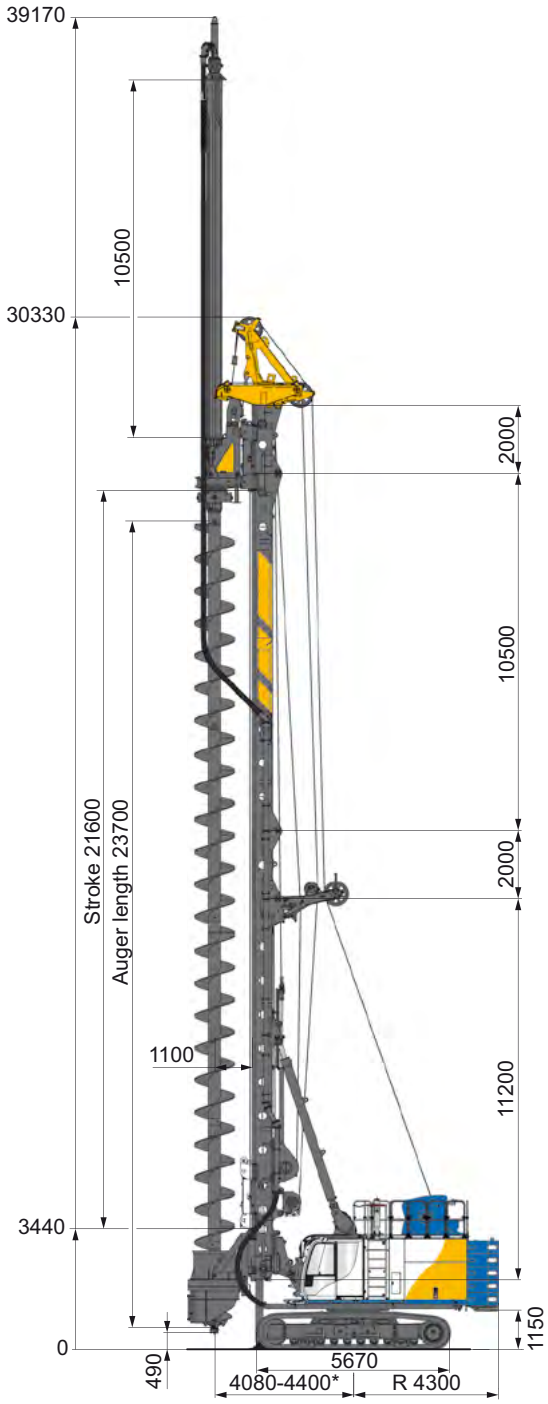

	Basic version	Upgraded version
Mast extension	2 m + 2 m Vario	2 m + 2 m Vario
Kelly extension	without	10.5 m
Max. drilling diameter	1,180 mm	1,180 mm
Max. drilling depth (with auger cleaner)	21.3 m	31.8 m
Max. extraction force with main and crowd winch (effective)	830 kN	830 kN
with counterweight *	14.9 t	19.7 t

* depending on equipment

Further Applications

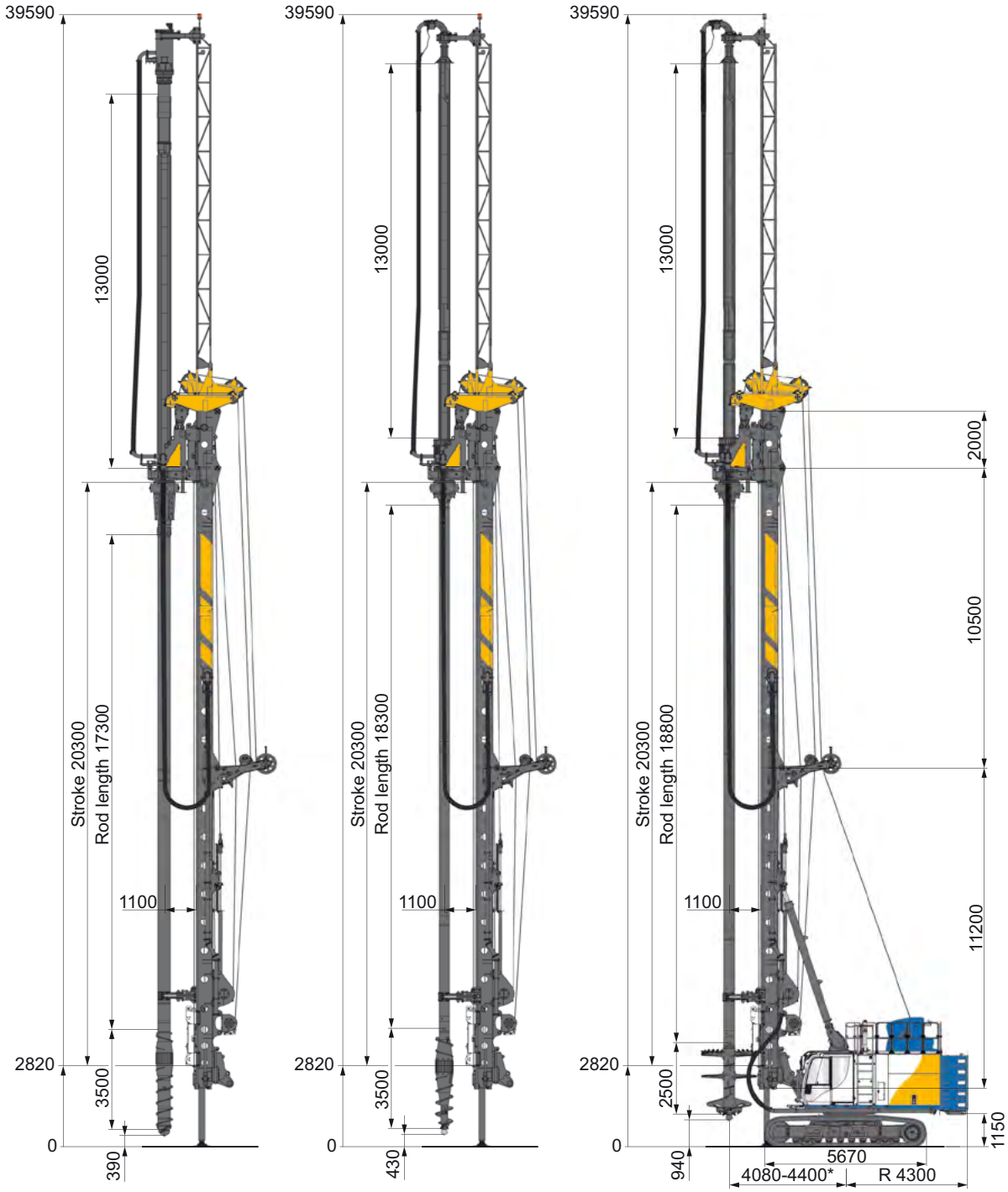

	FDP Lost-Bit drilling	FDP drilling	SCM mixing
Mast extension	2 m Vario	2 m Vario	2 m Vario
Kelly extension	13.0 m	13.0 m	13.0 m
Max. drilling and mixing diameter	620 mm	620 mm	1,900 mm (2,500 mm**)
Max. drilling and mixing depth	32.4 m	32.4 m	31.9 m
Max. extraction force with main and crowd winch (effective)	830 kN	830 kN	830 kN
with counterweight *	17.3 t	14.9 t	14.9 t

* depending on equipment
** operation only with special equipment

Further Applications

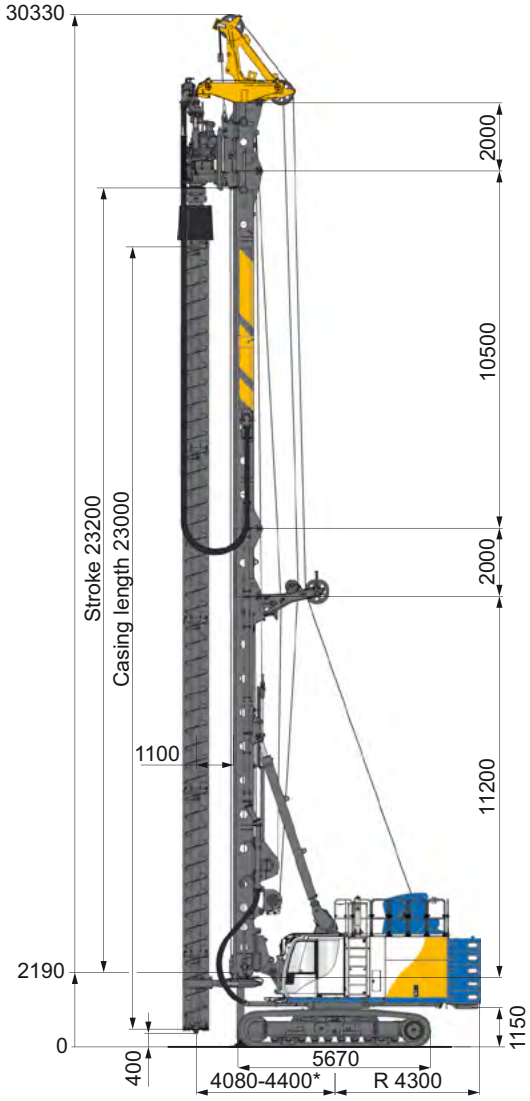

	FoW drilling	
	DKS 50 / 140	DKS 100 / 200
Mast extension	2 m + 2 m Vario	2 m + 2 m Vario
Max. drilling diameter	610 mm	750 mm
Max. drilling depth	22.5 m	22.5 m
Max. extraction force with main and crowd winch (effective)	500 kN	530 kN
Max. torque: Auger (right-hand rotation) Casing (left-hand rotation)	 50 kNm 140 kNm	 100 kNm 200 kNm
Ejection system	without	optional
with counterweight *	14.9 t	24.5 t

* depending on equipment

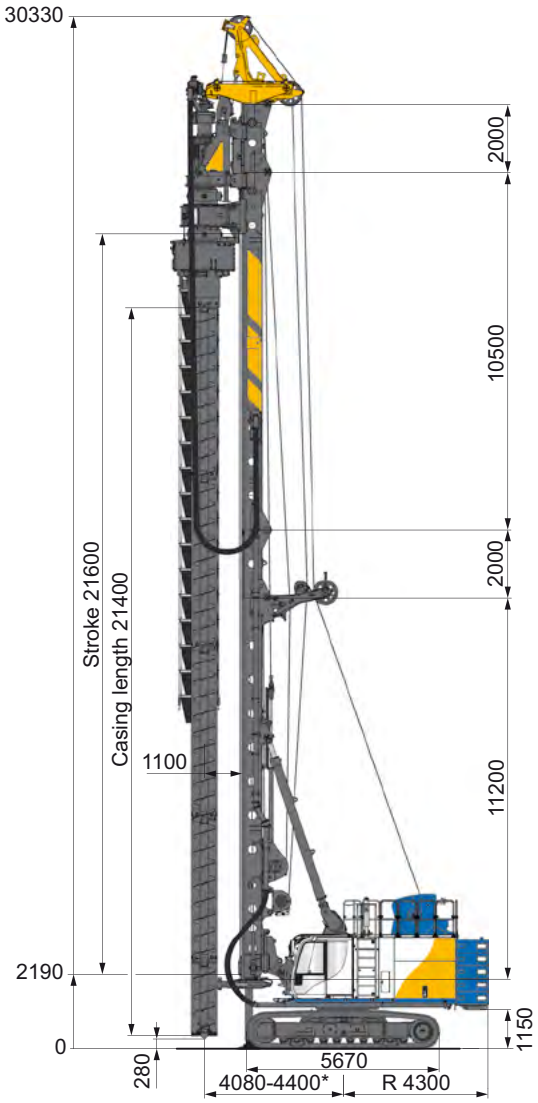

	CCFA drilling with BTM 400	
Mast extension	2 m + 2 m Vario	2 m Vario
Max. drilling diameter	750 mm	880 mm
Max. drilling depth	21.3 m	19.3 m
Max. extraction force with main and crowd winch (effective)	830 kN	830 kN
Max. torque: Auger (right-hand rotation) Casing (left-hand rotation)	 200 kNm 400 kNm	 200 kNm 400 kNm
Ejection system	Standard	Standard
with counterweight *	29.4 t	29.4 t

* depending on equipment

Further Applications

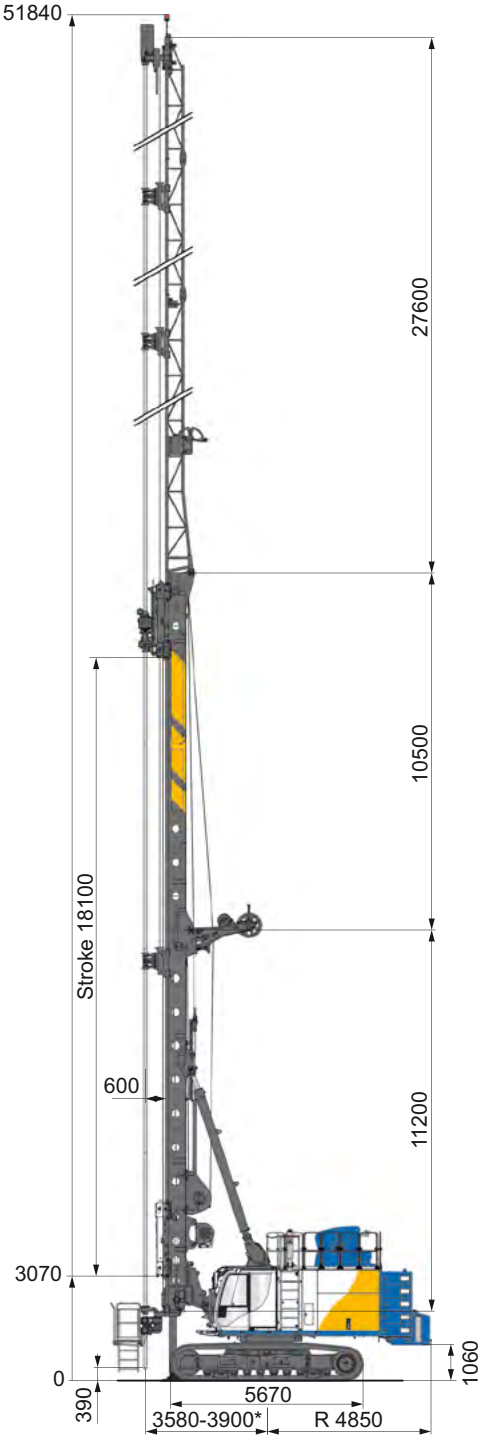

	Jet Grouting
Lattice mast	27.6 m
Rod diameter	89 - 133 mm
Max. jetting depth	41.3 m
Rotary drive	KDK 14 S
Max. extraction force with crowd winch (effective)	330 kN
with counterweight *	24.5 t

* depending on equipment

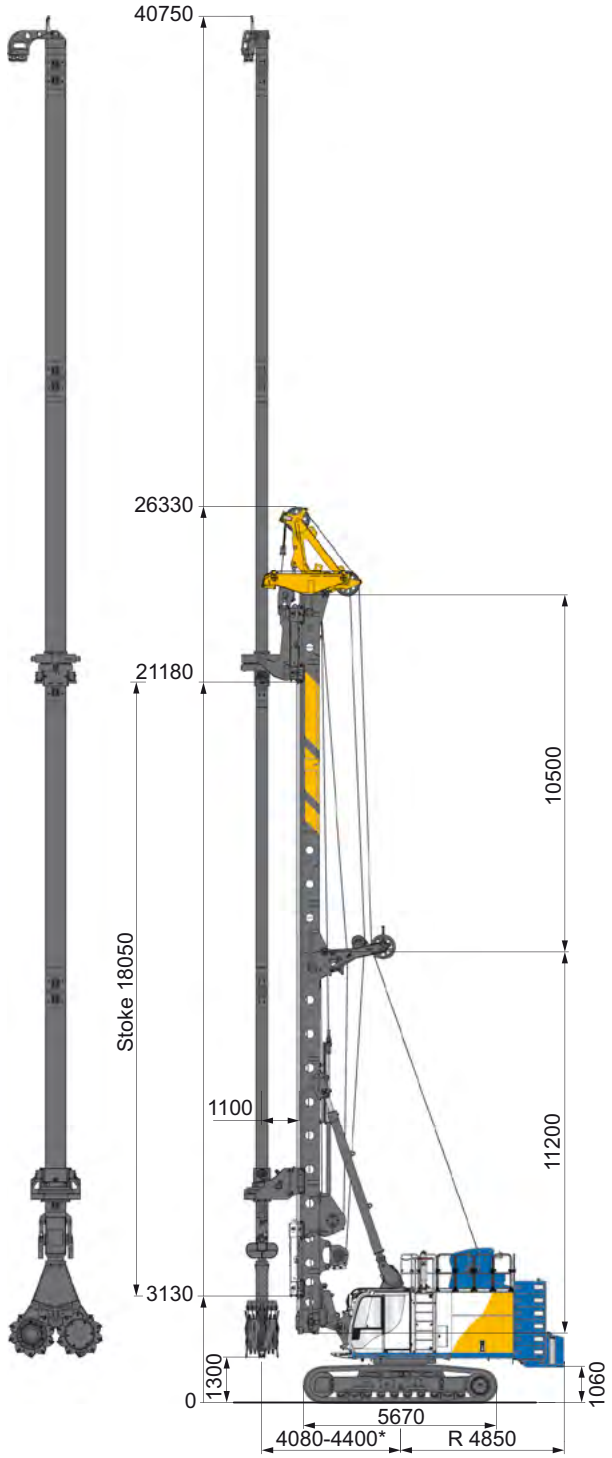

	CSM mixing **	
Cutter / mixing head	BCM 5	BCM 10
Panel width	1,000 mm	1,200 mm
Panel length	2,400 mm	2,800 mm
Max. mixing depth	34.7 m	

** For detailed information see brochure ”Cutter-Soil-Mixing - Process and Equipment“ 905.656.2

Transport – Dimensions and Weights

G = Weight
B = Width

Weights shown are approximate values; optional equipment may change the overall weight and dimensions.

Transport with UW 100

Base carrier

G = 46.4 t
G = 50.8 t (with main winch 265 kN)

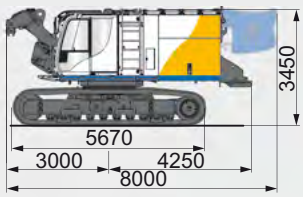

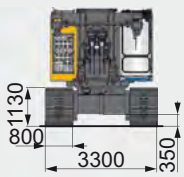

G = 62.3 t
G = 66.5 t (with main winch 265 kN)
G = 67.8 t (with main winch 265 kN and Vario-mast section 2 m)

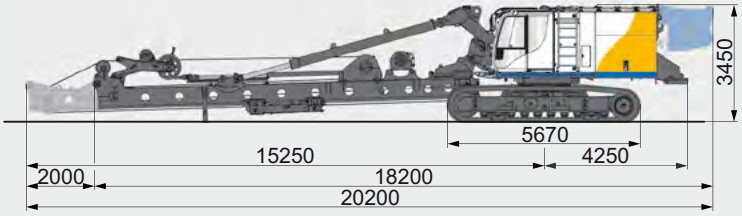

Upper mast section with mast head

G = 4.8 t
B = 1,700 mm

Rotary drive

G = 5.2 t (KDK 300 K)
G = 5.5 t (KDK 300 S)
G = 6.7 t (KDK 340 K)**

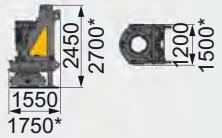

Lower mast section

G = 13.5 t
G = 14.8 t (mit Vario Mastsegment 2 m)
B = 2,100 mm

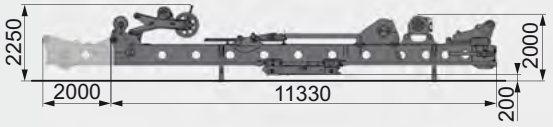

Backstay cylinder

G = 2 x 1.1 t
B = 300 mm

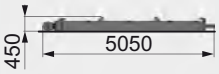

Mast head

G = 1.4 t
B = 1,300 mm

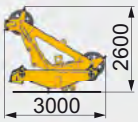

Vario-mast section 2 m

G = 1.3 t
B = 900 mm

Mast extension 2 m

G = 1.0 t
B = 900 mm

Counterweight *

G = 2.5 t / 4.9 t
B = 3,000 mm

Main winch 265 kN

G = 4.2 t (mit 100 m Seil)

Width of crawlers retracted / extended	UW 100
Track shoes 700 mm	-
Track shoes 800 mm	3,300 - 4,500 mm
Track shoes 900 mm	3,400 - 4,600 mm

* depending on application

International Service Hotline
+800 1000 1200*

+49 8252 97-2888
BMA-Service@bauer.de
*toll-free number, where available

24/7

BAUER Maschinen GmbH
BAUER-Strasse 1
86529 Schrobenhausen
Germany
Phone: +49 8252 97-0
bma@bauer.de
www.bauer.de

Design developments and process improvements may require the specification and materials to be updated and changed without prior notice or liability. Illustrations may include optional equipment and not show all possible configurations. These and the technical data are provided as indicative information only, with any errors and misprints reserved.

905.861.2 05/2026